ASSEMBLY INSTRUCTION
CHRYSTELLE SINGLE BED
ITEM CODE 79638

Imported by Amart Furniture Pty Ltd, Qld, Brisbane Australia.
For any assistance with assembly or for missing parts please phone
Amart Furniture, Customer Service Free call 1800 351 084

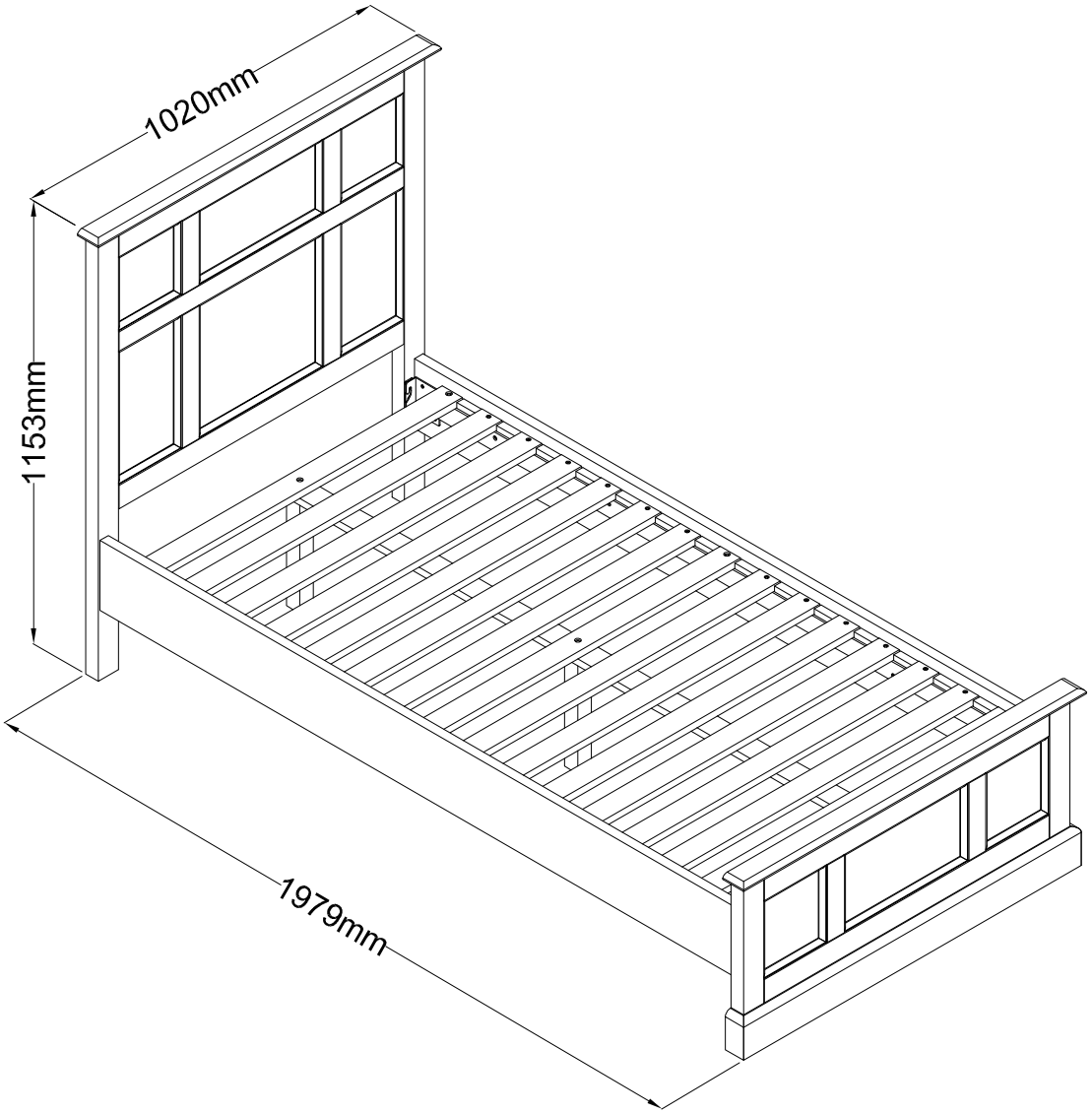

Imported by Amart Furniture Pty Ltd, Qld, Brisbane Australia.
For any assistance with assembly or for missing parts please phone
Amart Furniture, Customer Service Free call 1800 351 084

PRE-ASSEMBLY PREPARATION

Before you start:

1. Choose a clean, level, spacious assembly area. Avoid hard surfaces that may damage the product
2. Take care when lifting. Product should be assembled as near as possible to the point of use
3. Ensure that you have all required contents for complete assembly
4. Always read the assembly instructions carefully before beginning assembly.
5. Keep all hardware parts and packaging out of reach of small children.
6. Do not over tighten the screws and bolts as this may damage the threads

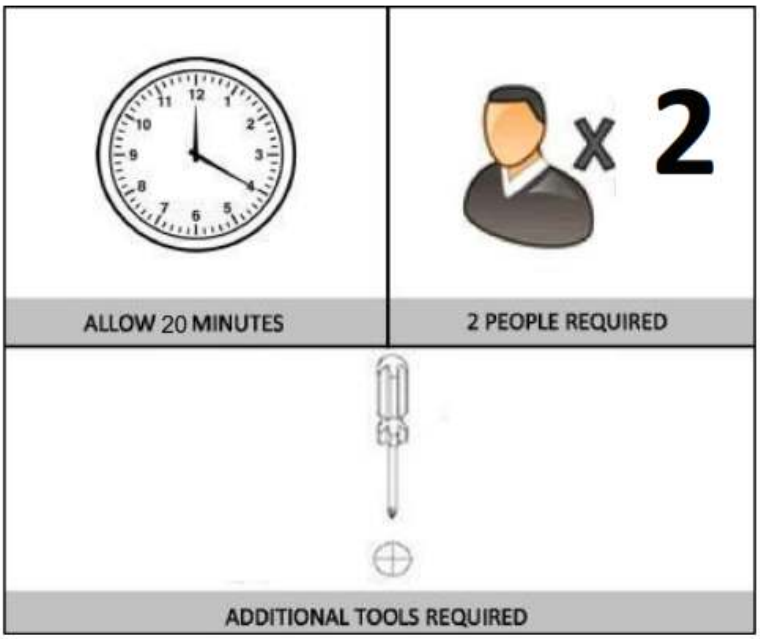

PARTS LIST

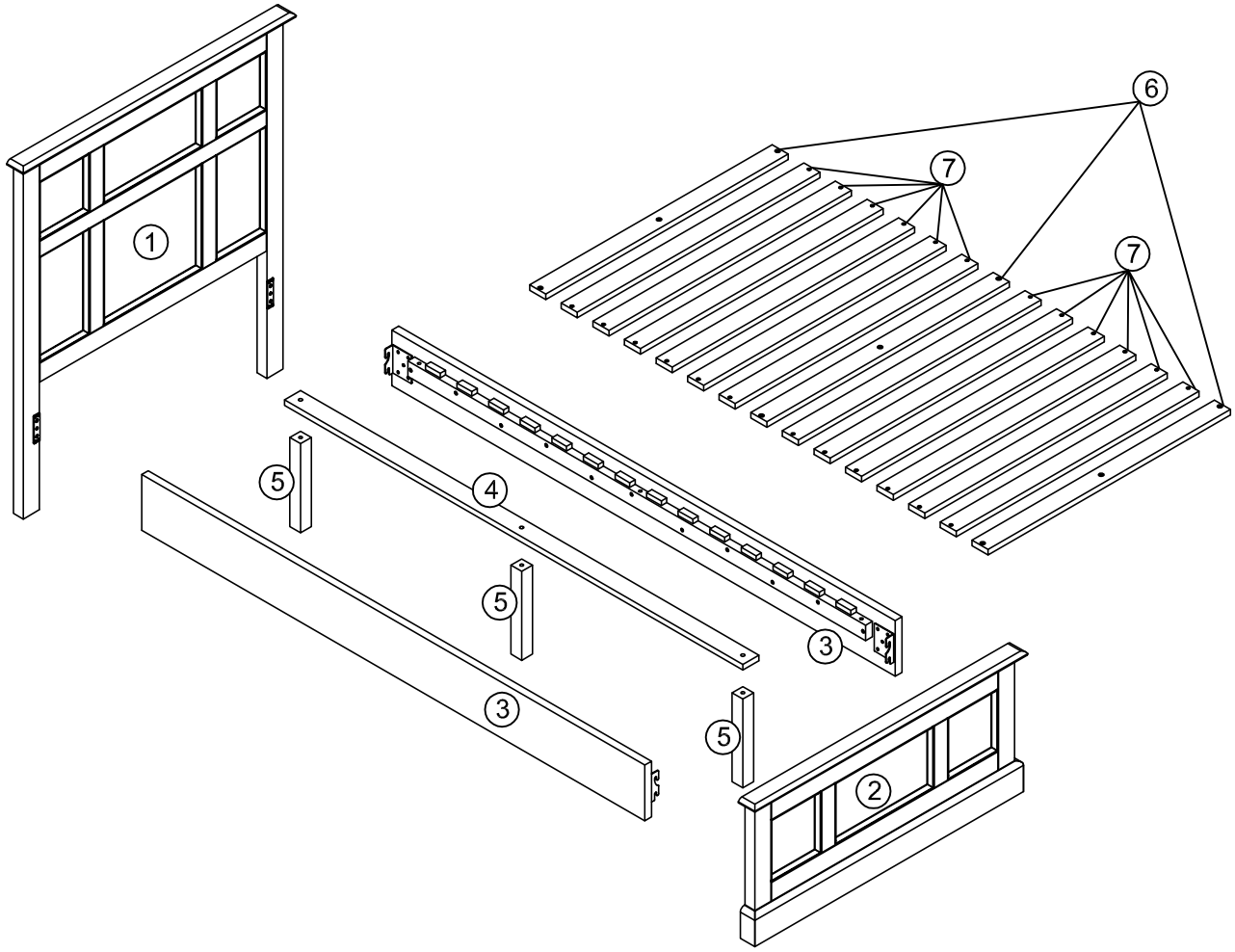

NO.	PARTS LIST	QT'Y
1	HEADBOARD	1 pc
2	FOOTBOARD	1 pc
3	SIDE RAILS	2 pcs
4	SUPPORT SLAT	1 pc
5	SUPPORT LEGS	3 pcs
6	SLATS (18x60x906mm)	3 pcs
7	MIDDLE SLATS (18x60x906mm)	12 pcs

a ☐ Bolt M6x35mm 6pcs	b ☐ Bolt M6x60mm 3pcs	c ☐ Bolt M8x25mm 8pcs
d ☐ Allen key M3 1pc	e ☐ Screw M4x30mm 24pcs	f ☐ Adhesive felt pad 20x20x5mm 4pcs

STEP 1: Attach adhesive felt pad ⓕ onto the legs.

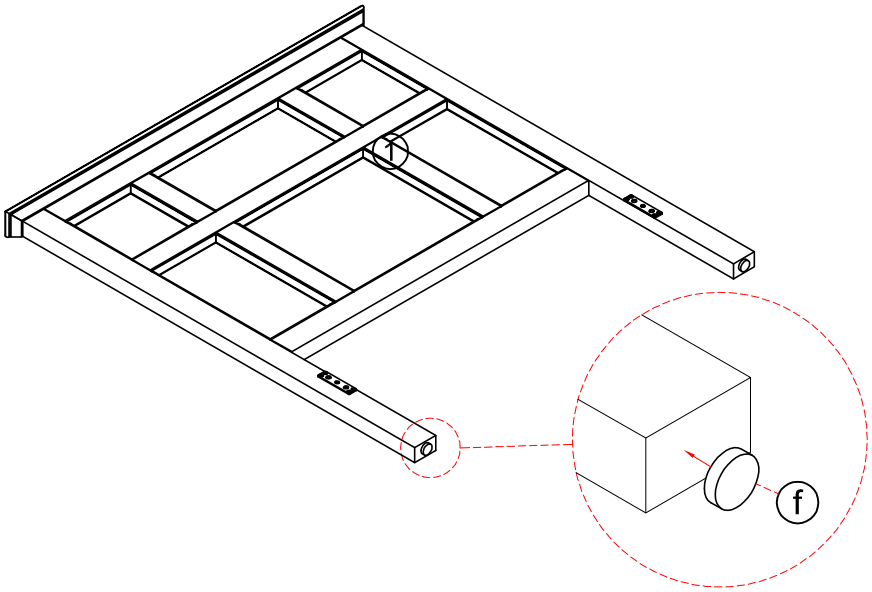

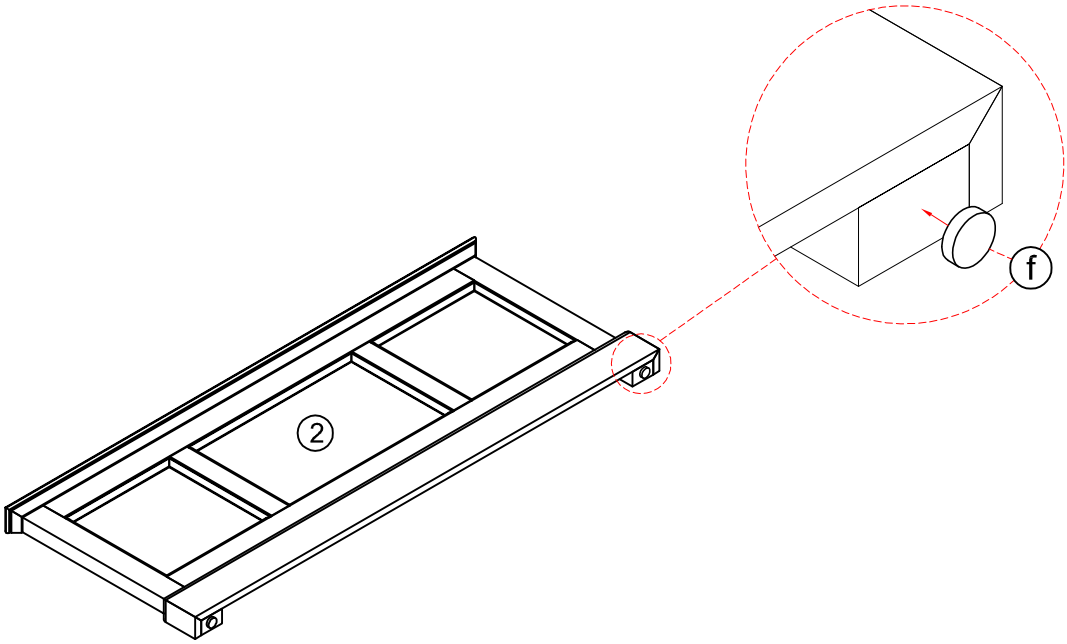

STEP 2: Attach side rails ③ to headboadrd legs ① and footboad ② by interlocking the brackets on the side rail with the bolt ⓒ on the headboadrd/footboard and then push down to lock in place.

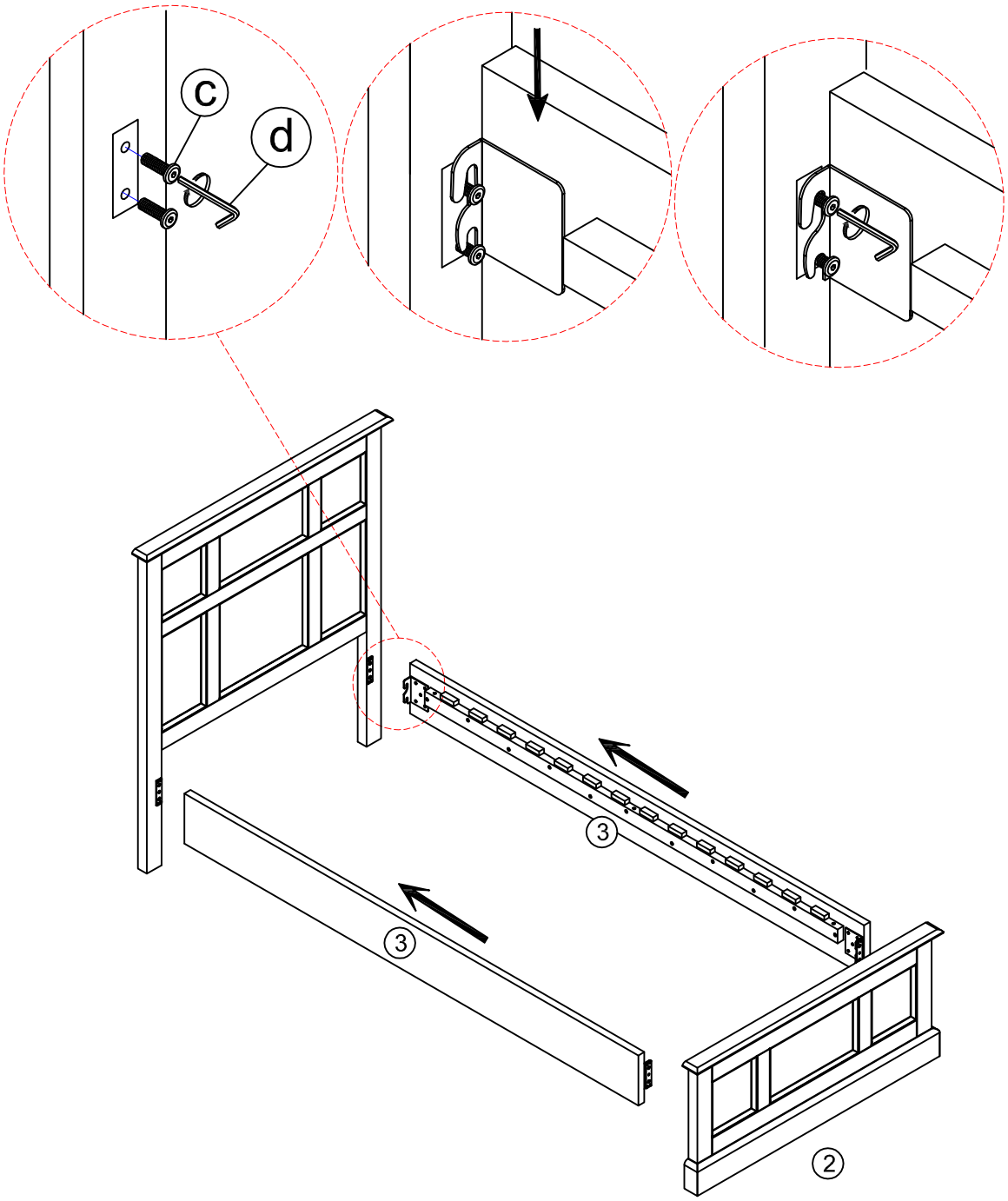

STEP 3: Tighten the slats⑥and support slat④to all support legs⑤with bolt ⓑ.

Assemble these parts into an **H frame** out of bed frame.

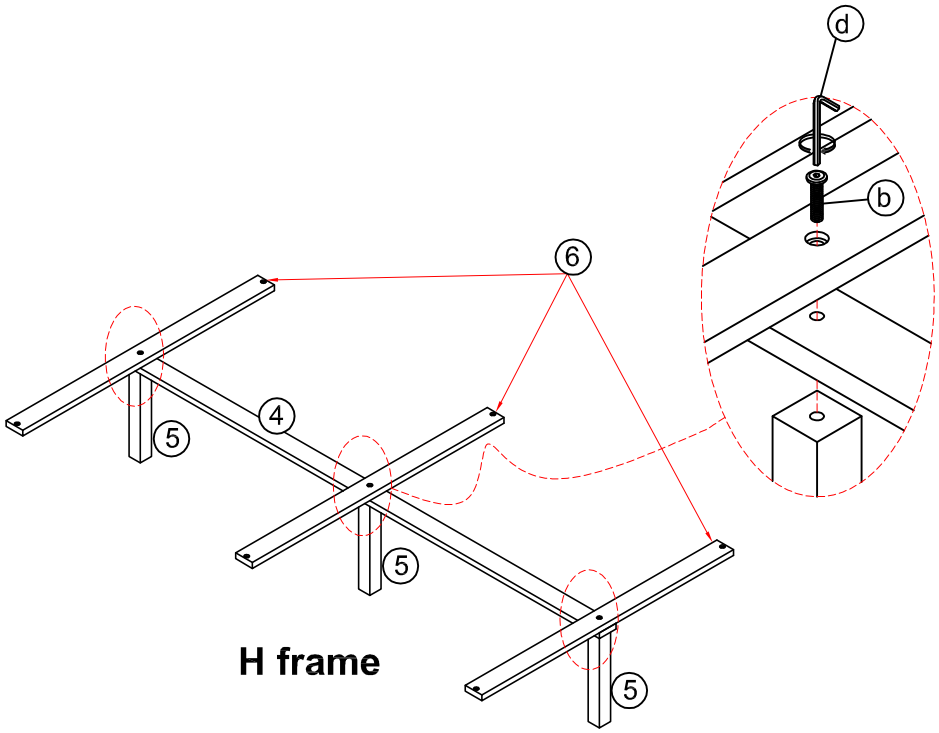

STEP 4: Use two people to place **H frame** onto the side rail③.
Attach **H frame** onto the side rail ③using the bolt ⓐ,tighten it up by using an allen key ⓓ.

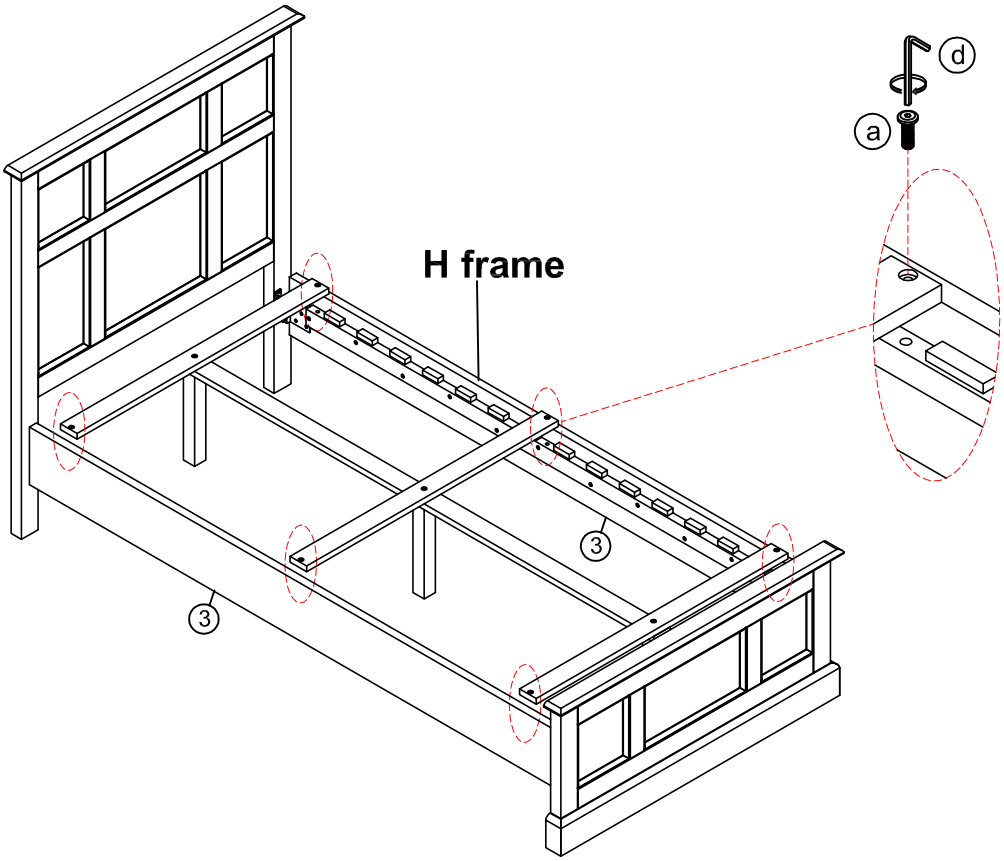

STEP 5:
Attach the middle slats ⑦ onto the side rail ③ using the screws ⓔ ,tighten it up by using an screwdriver.

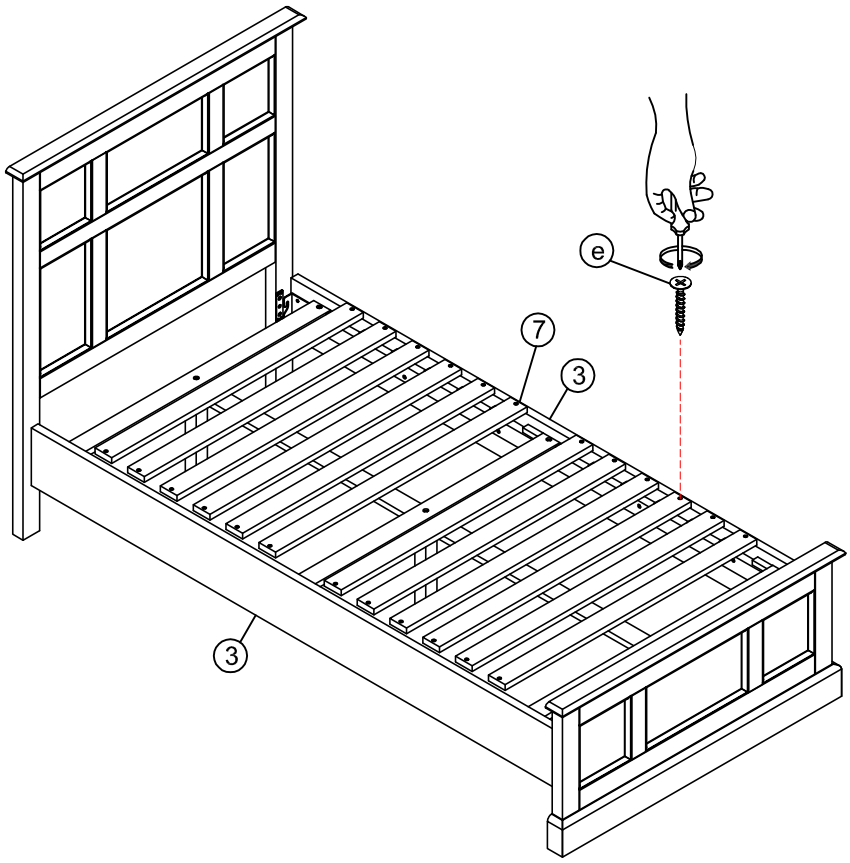

ASSEMBLY IS COMPLETE

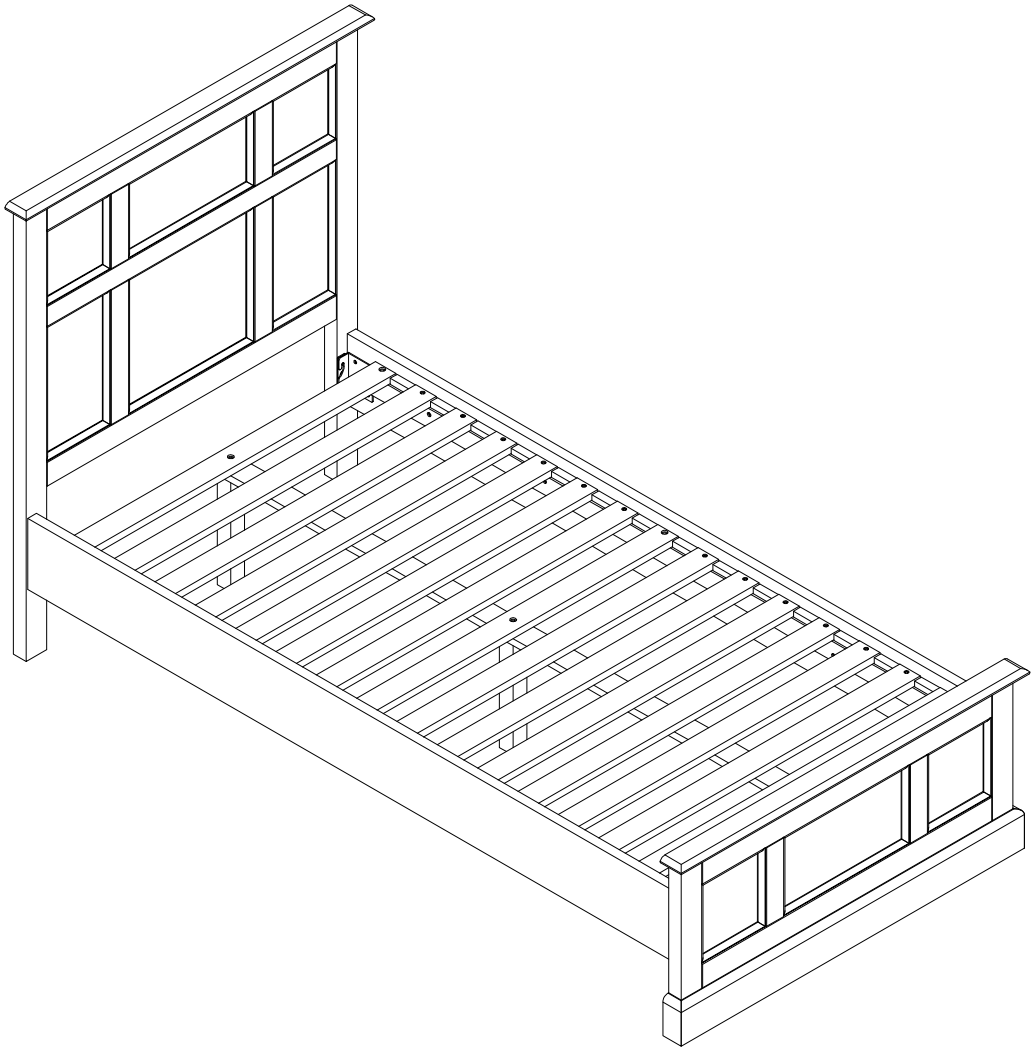

IMPORTANT NOTE:

. DO NOT push or pull the bed if there is a need for re-positioning as this may result in broken support legs for the centre rail.

IMPORTANT: CARE GUIDE FOR YOUR TIMBER FURNITURE

Congratulations! You have just purchased a quality product from Amart furniture.
Please read on for important information regarding your purchase…

A multi-step finish is applied to all our furniture, but all wood comes from nature. Because of this, there will be natural variations in surface texture and grain like knots, mineral streaks and sap runs that may affect the finish.

These differences in character are not defects, but distinctions that make each piece of furniture unique.

Our furniture is built to last. Following these steps, basic care should protect your investment for years to come.

- Dust frequently with a clean damp lint-free cloth. This will help remove abrasive build up which can damage a finish over time.
- Do not place hot objects on any furniture surface. Always use a suitable placemat. Laminate and lacquer finishes on table tops provide added scratch and heat resistance to our furniture, but they can still be damaged without proper care.
- Avoid exposing your furniture to strong sunlight, heat, open windows or dampness. Prolonged exposure to direct sunlight can fade the finish of your furniture, and sudden extreme temperature and humidity changes can cause cracking or splitting.
- Do not expose your furniture to any liquids. Never allow water to sit on your furniture. Alcohol, nail polish and perfume are also dangerous as they will dissolve the lacquer finish on contact and may require professional repairs.
- Do not allow plastic to come in direct contact with your furniture. Chemicals in the plastic of placemats etc may soften and mark the finish if left in contact with the furniture for a period of time.

Amart